MATEK F405SE + iNAV MATEKF405SE

MCU: STM32F405
IMU: MPU6000 accelerometer/gyro (SPI)
Baro: BMP280 (I2C)
OSD: INAV OSD w/ AT7456E chip
Blackbox: MicroSD card slot (SD/SDHC)
VCP & 6x UARTs
2x Motors, 7x Servos outputs, 2x I2C
3x LEDs for FC STATUS (Blue, Red) and 3.3V indicator(Red)
Built in inverter for SBUS input (UART2-RX)
PPM/UART Shared: UART2-RX
SoftSerial on TX2 pad
Battery Voltage Sensor: 1:10 (Scale 1100)
WS2812 Led Strip : Yes
Beeper : Yes , RSSI: Yes
Mounting: 30.5 x 30.5mm, Φ4mm with Grommets Φ3mm
Dimensions: 56 x 36 x 13 mm Weight: 25g

+ & - : LiPO & ESC power pads, 9~30V DC.
S1/S2: ESC signal for motor 1 & 2
G: ESC signal ground
Voltage meter scale: 1100
Current Sensor: 104A (Scale 317)

Button: Boot(DFU) mode button
LED0(Blue) & LED1(Green): FC Status indicator
LED2(Red):3.3V indicator
[DA1 CL1] : I2C1, supports Baro only. BMP280 /MS5611 /BMP085

PWM ESC

LED2 LED1 LED0

ESC1

ESC2

LiPo 3-6S

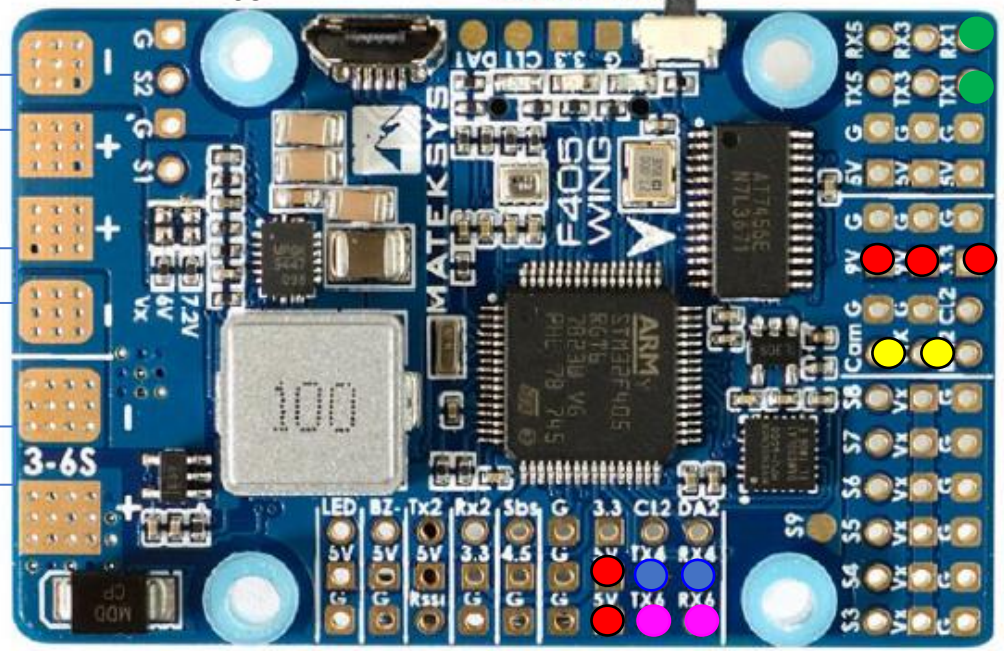

TX1/RX1: UART1
TX3/RX3: UART3
TX5/RX5: UART5
5V: onboard BEC 5V 2A cont. Max.3A
G: Ground

VTX: Video Transmiter Signal
Cam: Camera video signal
9V: onboard BEC 9V 2A cont. Max.3A,
12V option w/ 12V jumper bridged.

[DA2 CL2] : I2C2, for compass and Pitot
compass HMC5883 /MAG3110 /QMC5883 /IST8310
Pitot_MS4525

S3/S4/S5/S6/S7/S8/S9: Servo signal
Vx: onboard BEC 5V/6V/7.2V 5A cont. Max.6A
for servos, Default is 5V

LED:
1-2 BATTERY (GREEN/YELLOW/RED)
3-4 ARM (GREEN/BLUE)
5-7 GPS (RED/GREEN)

PWM:
S1 - MOTOR1
S2 - MOTOR2
S3 - ELEV - PITCH
S4 - AIL1 - ROLL
S5 - AIL2 - ROLL
S6 - RUDD - YAW

AUX:
CH5 (C) – NO/ARM/RTH
CH6 (D) – MANUAL/RATE/HORIZON
CH7 (F) – NO/CRUISE/ALTHOLD
CH8 (KNOB) – POSHOLD (RIGHT END)

MCU: STM32F405RGT6(168MHz)
IMU: MPU6000
OSD: INAV OSD
Baro: BMP280

LED MODUL

PIN	PIN Name	I/O	Description
1	1PPS	O	1 Pulse Per Second when 3D fixed
2	GND	G	Ground
3	TX	O	TTL Serial Data Output.
4	RX	I	TTL Serial Data Input.
5	VCC	I	DC 3.6V - 5.5V supply input,Typical: 5.0V
6	BOOT	I	N.C.

Sbs: Built in inverter of RX2 for SBUS input
RX2: UART2-RX for DSM2, DSMX, IBUS, PPM share RX2 pad
TX2: Softserial_TX1 w/ CPU based serial ports enabled
TX2: UART2-TX pin w/o Softserial enabled
TX4/RX4: UART4
TX6/RX6: UART6

5V: onboard BEC 5V 2A cont. Max.3A
4V5: 4.4~4.8V, the voltage is also supplied when connecting via USB
3.3: LDO3.3V Max.500mA
G: Ground

LED: WS2812 LED signal output
Bz- & 5V: General active 5V buzzer
Bz-, 5V & G: Matek Dbuz5V
Rssi: Frsky RSSI input

UART
UART1 – LTM 9600 - TELEMTERY (TX1+RX1) LORA E32-TTL
UART2 - NO
UART3 - TRAMP MENU (TX3)
UART4 - GPS MODUL (TX4+RX4)
UART5 - NO
UART6 - SRXL2 Receiver (TX5) SPEKTRUM 4650

16.1.2021
DUPE

Holybro Kakute F4 V2 + BTFL KAKUTEF4V2

MCU: STM32F405RGT6 32-bit processor
IMU: ICM20689 (SPI)
Barometer: BMP280
USB VCP Driver (all UARTs usable simultaneously; USB does not take up a UART)
5 hardware UARTS (UART1,3,4, 5, 6)
Supports serial receivers (SBUS, iBus, Spektrum, Crossfire) only.
PPM and PWM receivers are not supported.
128 Mbit Dataflash chip for Blackbox logging
Dimensions: 35x30x8mm (includes USB in height)
Mounting Holes: Standard 30.5mm square to center of holes
Weight: 7g

UARTs
UART1 -
UART2 -
UART3 -
UART4 - TELEMETRY LORA (TX4+RX4) E32-TTL
UART5 -
UART6 - GPS MODUL (TX6+RX6) BN-220

PIN	PIN Name	I/O	Description
1	GND	G	Ground
2	TX	O	Serial Data Output.
3	RX	I	Serial Data Input.
4	VCC	I	DC 3.0V - 5.5V supply input,Typical: 5.0V

Top of board

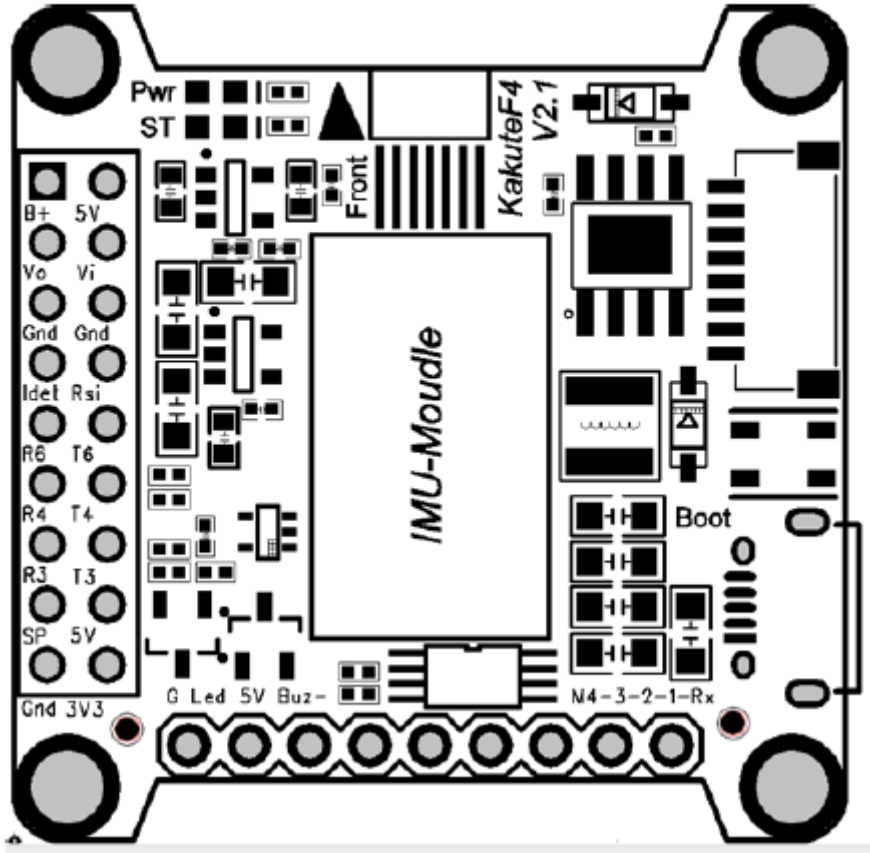

Pin	Function
1	Battery Voltage
2	R5 (for ESC telemetry)
3	Ground
4	Current Sensor Input
5	M1
6	M2
7	M3
8	M4

Pin	Function
Buz-	Piezo buzzer negative leg
Led	WS2812 addressable LED signal wire
SP	FrSky SmartPort Telemetry (UART 1, inverted)
R3, T3	UART3 RX and TX (automatic inversion)
R4, T4	UART4 RX and TX (uninverted)
R6, T6	UART6 RX and TX (uninverted)
Rsi	Analog (0-3.3v) RSSI input
Idet	Current Sensor (0-3.3v) input
3V3	3.3v output (200 mA max)
5v	5v output (1.5 A max)
M1 to M4	Motor signal outputs
RX	UART 5 RX (uninverted, for ESC Telemetry)
VO	Video output to video transmitter
VI	Video input from FPV camera
Boot	Bootloader button
G or Gnd	Ground
B+	Battery positive voltage (2S-6S)

21.9.2021
DuPe

AIRBOT OMNIBUS F4V6 + iNAV OMNIBUSF4V6

- STM32 F405 MCU
- INCL. BARO BMP280
- SPI Sensor MPU6000
- 6PWM output, 5x UART
- V1A BEC on board(3-6s) 8V BEC Camera
- FlashOnly 36x36mm,
- holes 30.5x30.5mm

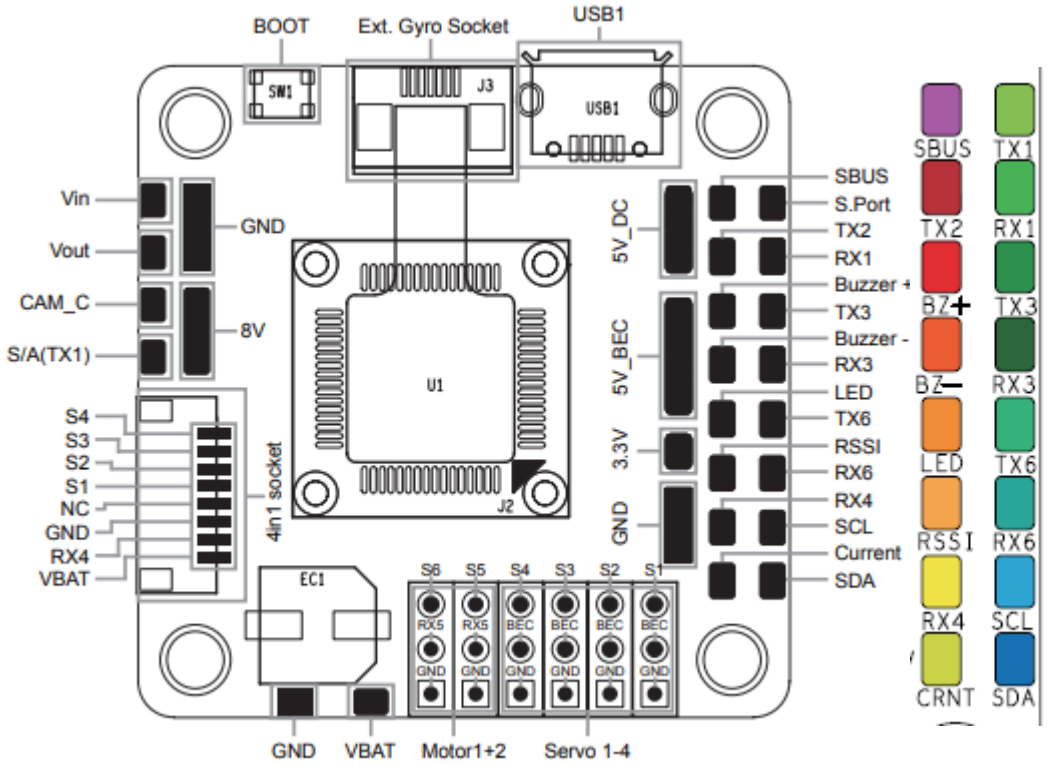

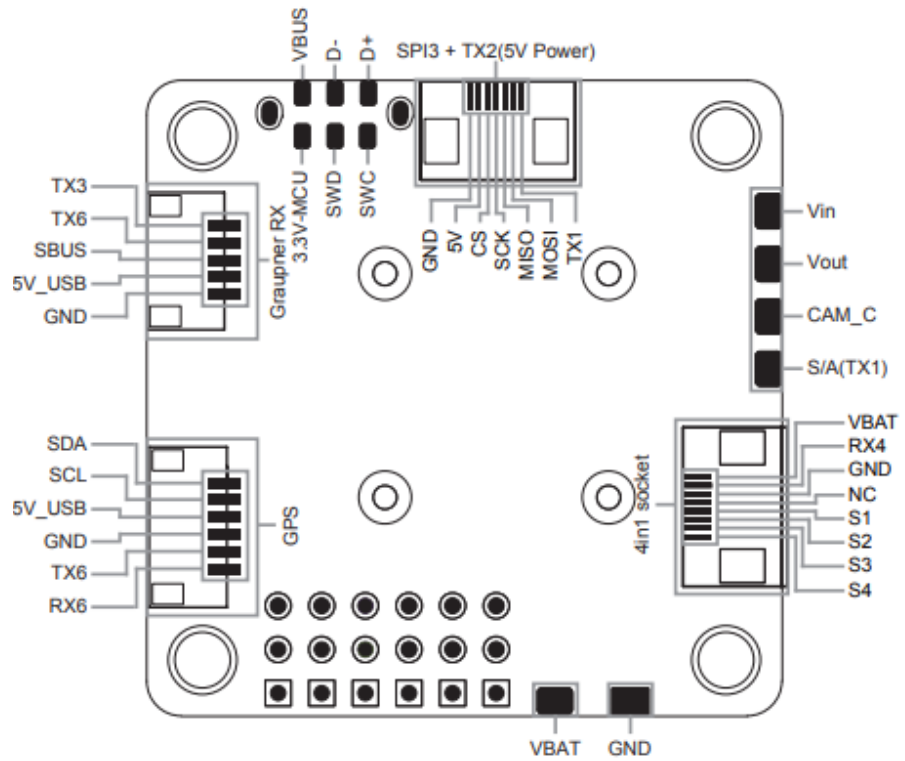

INAV - OMNIBUSF4V6

S1 B00 - MOTOR1
S2 B01 - MOTOR2
S3 A03 - PITCH/ELEV
S4 B05 - ROLL/AIL1
S5 C09 - YAW/RUDD
S6 C08 - ROLL/AIL2

smix 0 3 0 100 0 -1
smix 1 4 0 100 0 -1
smix 2 3 14 100 0 -1
smix 3 4 14 -100 0 -1
smix 4 5 2 100 0 -1
smix 5 2 1 100 0 -1

set platform_type = AIRPLANE
mmix reset
mmix 0 1.000 0.000 0.000 0.000
mmix 1 1.000 0.000 0.000 0.000

UARTs

UART1 - SRXL2 Receiver (TX1) SPEKTRUM 4650
UART2 -
UART3 - TELEMETRY LORA (TX3+RX3) E32-TTL
UART4 -
UART5 -
UART6 - GPS MODUL (TX6+RX6) BN-220

BTFL - OMNIBUSF4V6

resource MOTOR 1 C08
resource MOTOR 2 C09
resource SERVO 1 B05
resource SERVO 2 A03
resource SERVO 3 B01
resource SERVO 4 B00

mixer CUSTOMAIRPLANE
smix reset
smix 0 3 0 100 0 0 100 0
smix 1 4 0 100 0 0 100 0
smix 2 2 1 100 0 0 100 0
smix 3 5 2 100 0 0 100 0

S1 B00 > B05 - YAW/RUDD
S2 B01 > A03 - ROLL/AIL1
S3 A03 > B01 - ROLL/AIL2
S4 B05 > B00 - PITCH/ELEV
S5 C09 > C09 - MOTOR2
S6 C08 > C08 - MOTOR1

Function	Solder Pad Silk screen	Resouces	MCU Pin	Notes
SBUS	RC	UART1	PA10	Build-in invertera
DSM2	TX1	UART1	PA9	CLI serialrx_halfduplex set to ON
Smart Audio VTX	S/A	UART2	PA2	
Smartport	TX1	Software serial	PA9	Invalid when using DSM2 RX
ESC Telemetry	RX4	UART4	PA1	
Camera Control	CAM_C		PB9	
IIC2_SDA	RX3	UART3	PB11	
IIC2_SCL	TX3	UART3	PB10	
GPS	RX6/TX6	UART6	PC7/PC6	
WS2812B LED	LED		PB6	
Buzzer	Bz-/Bz+		PB4	
Current sensor scale				175
Current sensor offset				-19700 (±2000)
Current range				default 150A extended by sample resistor up to 320A

27.1.2020
DuPe

AIRBOT OMNIBUS F4Pro + iNAV OMNIBUSF4PRO

- STM32 F405 MCU
- SPI Gyro MPU6000
- On-Board OSD (FC over SPI bus)
- Baro (BMP280)
- MicroSD Blackbox
- 5v3a SBEC
- 6PWM output
- Built-in Current Sensor
- On-Board Video Filter 5V to VTX and Camera

UARTs

UART1 - SRXL2 Receiver (TX1) SPEKTRUM 4650
UART2 - NO
UART3 - GPS MODUL (TX3+RX3) BN-280
UART4 - NO
UART5 - NO
UART6 - TELEMETRY (TX6+RX6) LORA E32-TTL

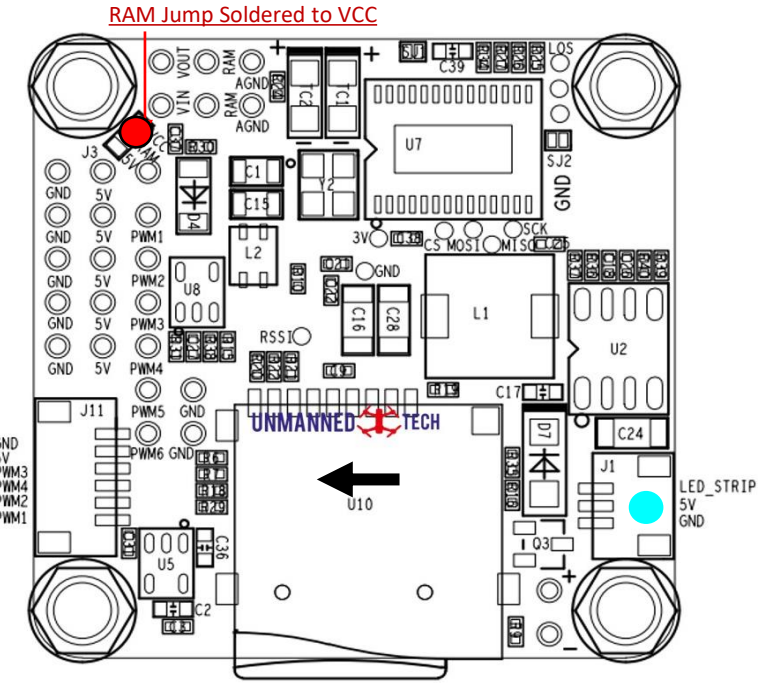

VTX TRAMP (2S-4S)
CAMERA (5-40V)

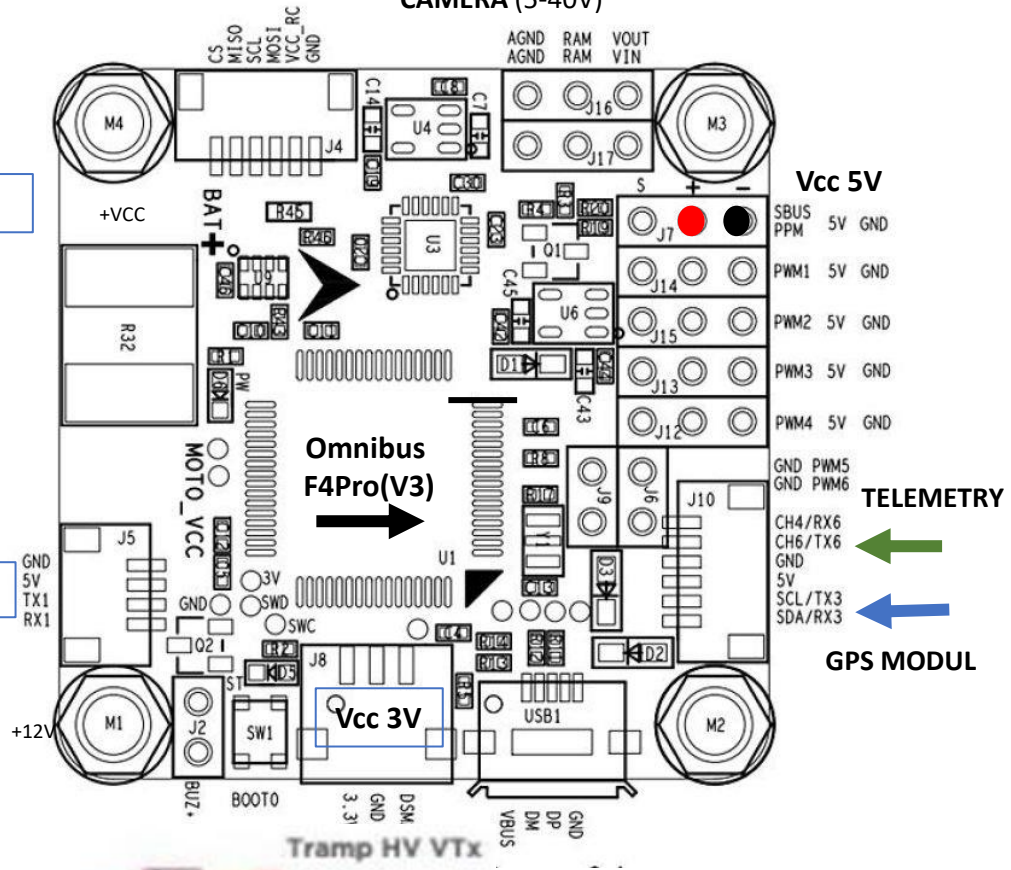

Tramp HV VTx

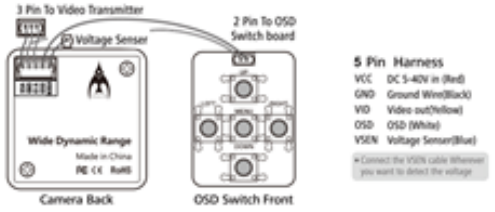

CAMERA FOXEER
Arrow Mini Pro
(5-40V)

INAV OMNIBUSF4Pro

PWM1 B00 - MOTOR1
PWM2 B01 - MOTOR2
PWM3 A03 - PITCH/ELEV
PWM4 A02 - ROLL/AIL1
PWM5 A01 - ROLL/AIL2
PWM6 A08 - YAW/RUDD

B00: MOTOR1
B01: MOTOR2
A03: MOTOR3
A02: MOTOR4
A01: MOTOR5
A08: MOTOR6

smix 0 3 0 100 0 -1
smix 1 4 0 100 0 -1
smix 2 3 14 100 0 -1
smix 3 4 14 -100 0 -1
smix 4 5 2 100 0 -1
smix 5 2 1 100 0 -1

set platform_type = AIRPLANE
mmix 0 1.000 0.000 0.000 0.000
mmix 1 1.000 0.000 0.000 0.000

BETAFLIGHT OMNIBUSF4Pro

resource MOTOR 1 B00
resource MOTOR 2 B01
resource MOTOR 3 NONE
resource MOTOR 4 NONE
resource SERVO 1 A03
resource SERVO 2 A02
resource SERVO 3 A01
resource SERVO 4 A08

mixer CUSTOMAIRPLANE
smix reset
smix 0 3 0 100 0
smix 1 4 0 100 0
smix 2 5 2 100 0
smix 3 2 1 100 0

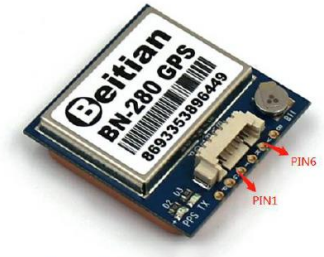

PIN	PIN Name	I/O	Description
1	1PPS	O	1 Pulse Per Second when 3D fixed
2	GND	G	Ground
3	TX	O	TTL Serial Data Output.
4	RX	I	TTL Serial Data Input.
5	VCC	I	DC 3.6V - 5.5V supply input,Typical: 5.0V
6	BOOT	I	N.C.

28.01. 2020
DuPe

Holybro Kakute F7 Mini V3 + BTFL KAKUTEF7MINIV3

- MCU: STM32F722RET6 32-bit processor,216MHz, 256Kbytes RAM, 512Kbytes Flash
- IMU: MPU6000 (SPI)
- Barometer: BMP280
- USB VCP Driver (all UARTs usable simultaneously; USB does not take up a UART)
- 5hardware UARTS (UART1,2,3,4,6)
- Supports serial receivers (SBUS, iBus, Spektrum, Crossfire) only.
- PPM and PWM receivers are not supported.
- Onbord 16Mbytes for Blackbox logging
- 5V Power Out: 1.0A max
- 3.3V Power Out: 0.2A max
- Dimensions: 30x30mm
- Mounting Holes: Standard 20mm square to center of holes(M4)
- Weight: 4g

UARTs

UART1 -
UART2 -
UART3 - TELEMETRY LORA (TX2+RX2) E32-TTL
UART4 - GPS MODUL (TX1+RX1) BN-220
UART5 -
UART6 -

Pin1	Battery positive voltage (2S-6S)
Pin2	R4 (for ESC telemetry)
Pin3	Ground
Pin4	Current Sensor Input
Pin5	M1
Pin6	M2
Pin7	M3
Pin8	M4

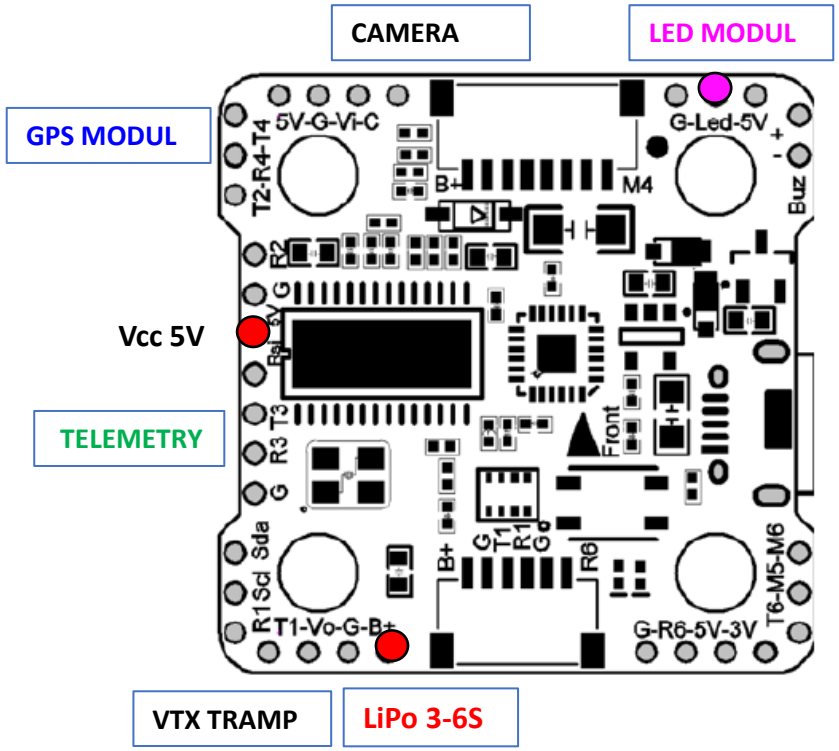

Pin1	Battery positive voltage (2S-6S)
Pin2	Ground
Pin3	T1
Pin4	R1
Pin5	Ground
Pin6	R6

Pin	Function
C	To camera OSD control
5v	5v output (1.0A max)
VO	Video output to video transmitter
VI	Video input from FPV camera
G	Ground
SDA, SCL	I^2C connection (for peripherals)
R1, T1	UART1 RX and TX
R2, T2	UART2 RX and TX
R3, T3	UART3 RX and TX
R4, T4	UART4 RX and TX
R6, T6	UART6 RX and TX
LED	WS2812 addressable LED signal wire
Buz-	Piezo buzzer negative leg
Buz+	Connect buzzer positive leg to 5v pad
3V3	3.3v output (200 mA max)
M5, M6	Additional motor signal outputs (located at side of board)
Rssi	Analog RSSI (0-3.3v) input from receiver
B+	Battery positive voltage (2S-6S)
Boot	Bootloader button

31.8.2021
DuPe

SucceX-E F4 V2.1 Flight Controller + BTFL IFLIGHT_SUCCEX-E F4

27.7.2021
DuPe

- - MCU：STM32F405
- - Gyro：MPU6000
- - Baro: BMP280(I2C)
- - Betaflight OSD：IFLIGHT OSD （AT7456E)
- - Blackbox：16MB(W25Q128)
- - 4X Uarts
- - 4 x Dshot/Proshot/Oneshot output
- - 4×0201 LEDs for FC STATUS (Blue, Red, Orange)
- - 3.3V indicator(Red) BAT/+5V/3.3V/start
- - 1 x Group of Gnd/Vbat/M1/M2/M3/M4/Cur/TX
- - VTX telemetry: YES
- - WS2812 led Strip：YES
- - Beeper：YES
- - Input：2-6S（Max 8S）
- - BEC：5V / 3A
- - **Firmware target : IFLIGHT_SUCCEX-E F4**
- - Mounting：30.5*30.5/ϕ4
- - Dimensions：36*36mm
- - Weight：6.9g

INAV MIX

S1 MOTOR1
S2 MOTOR2
S3 PITCH/ELEV
S4 ROLL/AIL1
S5/S6 - NO

BTFL

resource MOTOR 1 B00
resource MOTOR 2 B01
resource MOTOR 3 NONE
resource MOTOR 4 NONE
resource SERVO 1 C09
resource SERVO 2 C08
mixer AIRPLANE

UARTs

UART1 - ESC TELEMETRY (RX1) / TRAMP MENU (TX1)
UART2 - TELEMETRY (TX2 + RX2) LORA
UART3 - NO
UART4 - GPS MODUL (TX4+RX4)
UART5 - NO
UART6 - SRXL2 Receiver (TX6) SPEKTRUM 4650

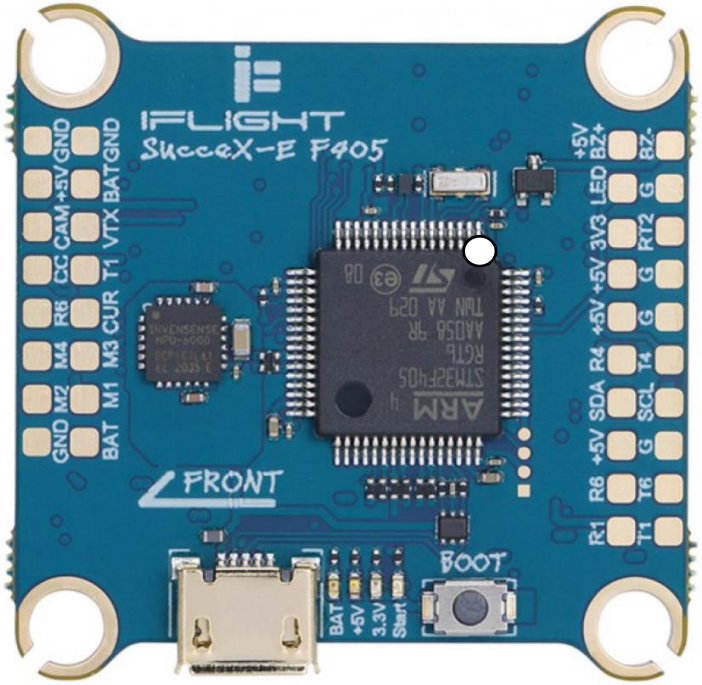

inav_3.0.0_IFLIGHT_SUCCEX_E_F4_21.hex
(iFlight SucceX-E F4 Stack is listed on Release page but no target · Issue #1057 · iNavFlight/inav-configurator · GitHub

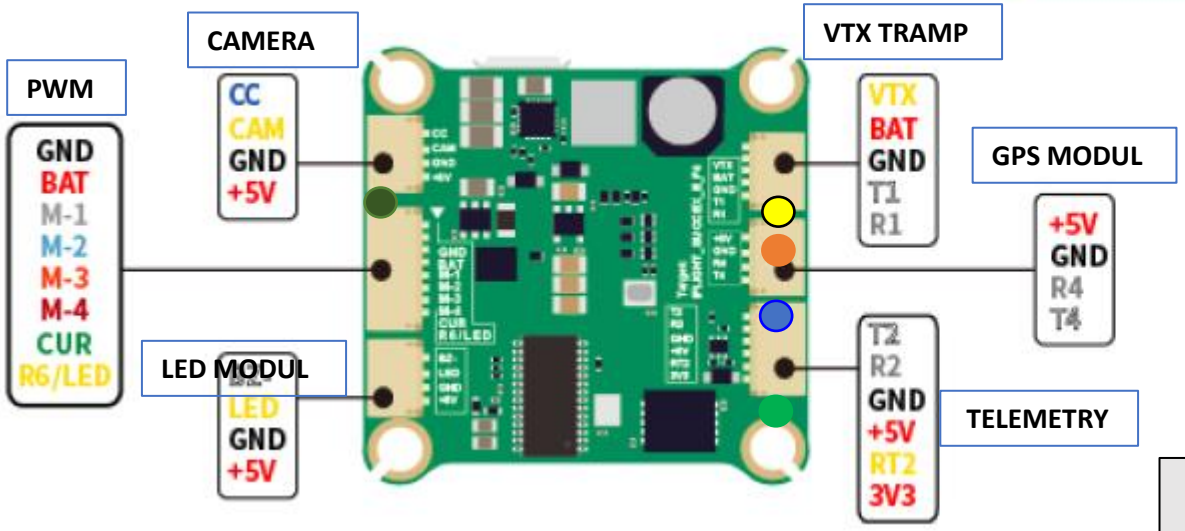

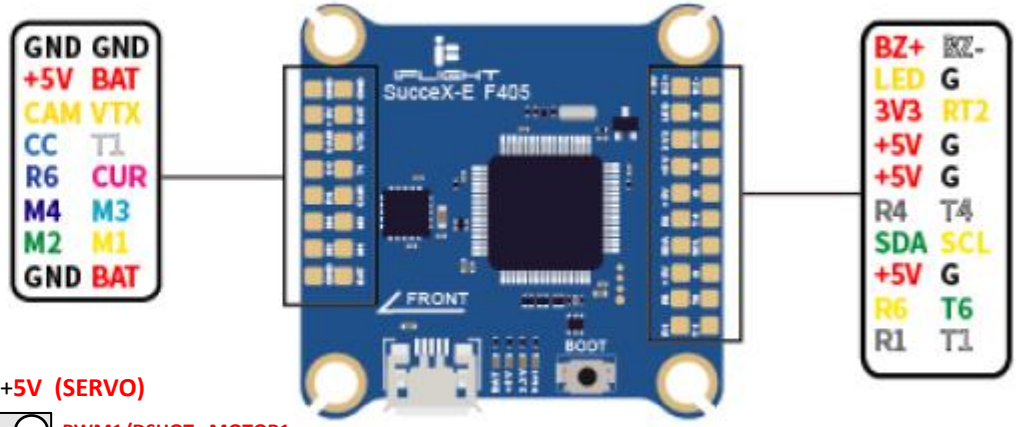

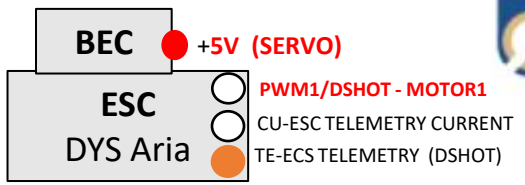

Ports

DOCUMENTATION

Note: not all combinations are valid. When the flight controller firmware detects this the serial port configuration will be reset.
Note: Do NOT disable MSP on the first serial port unless you know what you are doing. You may have to reflash and erase your configuration if you do.

Identifier	Data	Telemetry	RX	Sensors	Peripherals
USB VCP	MSP 115200	Disabled AUTO	Serial RX	Disabled 115200	Disabled 115200
UART1	MSP 9600	LTM 9600	Serial RX	Disabled 115200	Disabled 115200
UART2	MSP 115200	Disabled AUTO	Serial RX	Disabled 115200	Disabled 115200
UART3	MSP 115200	Disabled AUTO	Serial RX	Disabled 115200	Disabled 115200
UART4	MSP 115200	Disabled AUTO	Serial RX	GPS 115200	Disabled 115200
UART5	MSP 115200	Disabled AUTO	Serial RX	Disabled 115200	Disabled 115200
UART6	MSP 115200	Disabled AUTO	Serial RX	Disabled 115200	Disabled 115200
SOFTSERIAL1	MSP 115200	Disabled AUTO	Serial RX	Disabled 115200	Disabled 115200

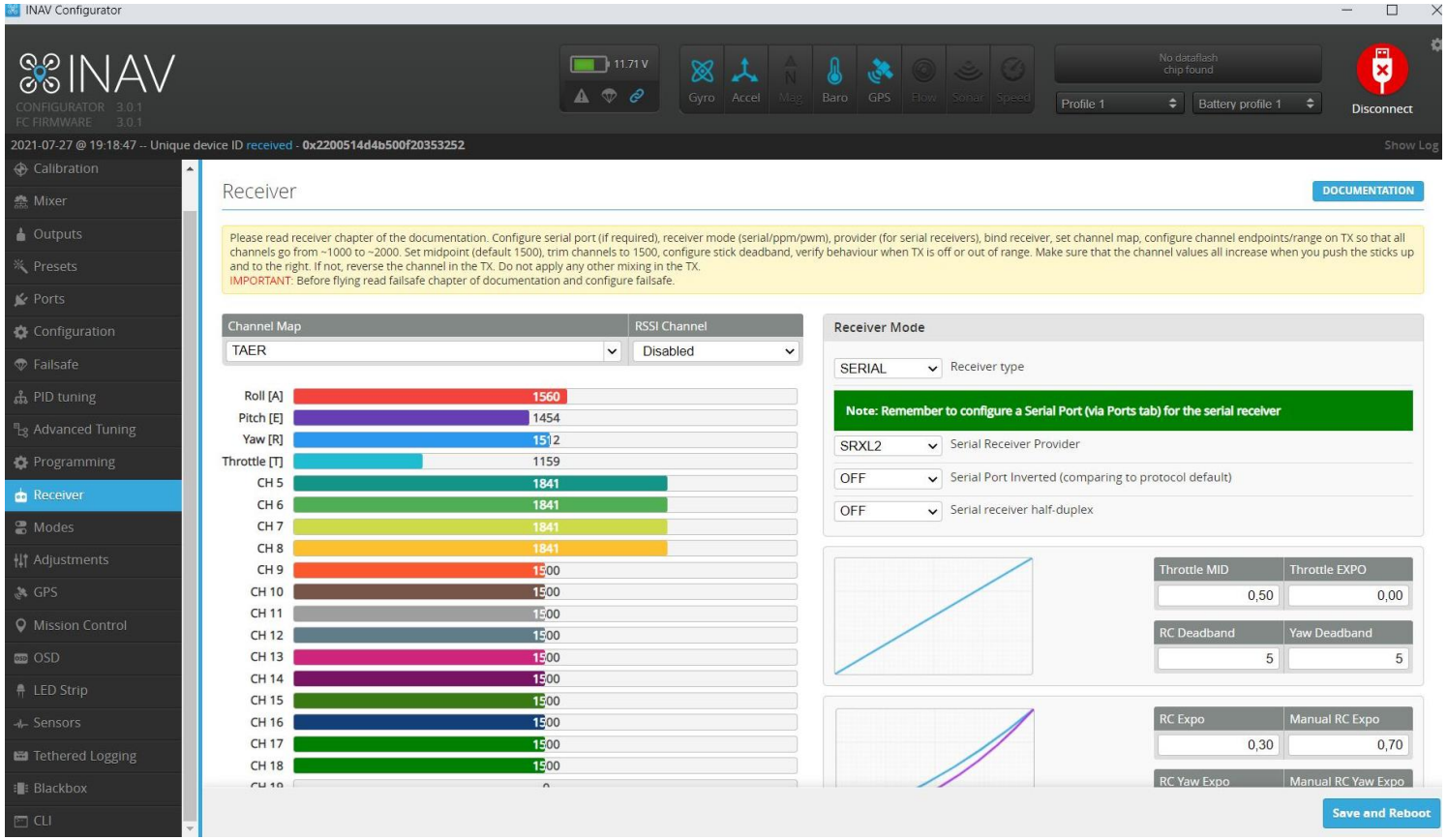

FC Specifications:
MCU: STM32F765VIT6, 216MHz , 512KB RAM, 2MB Flash
IMU: MPU6000 (SPI1) & ICM20602 (SPI3)
Baro: BMP280 (I2C2)
OSD: AT7456E (SPI2)
Blackbox: MicroSD card slot (SDIO)
7x Uarts (1,2,3,4,6,7,8) with built-in inversion.
1x Softserial1_Tx (INAV)
12x PWM outputs (S1~S10 support Dshot)
6x ADC (VBAT, Current, RSSI, Analog AirSpeed, VB2, CU2)
3x LEDs for FC STATUS (Blue, Red) and 3.3V indicator(Red)
2x I2C, 1x SPI4 break'out
Switchable Dual Camera Inputs
Switchable 5V/9V(12V) for Camera/VTX
High-precision Current Sense
ADC VB2 voltage divider: 1K:10K, ADC AirSpeed voltage divider: 10K:10K
TR/SA VTX control: Yes
WS2812 Led Strip : Yes
Beeper : Yes , RSSI: Yes
Analog Airspeed sensor: Yes , Digital Airspeed sensor: Yes
Dimensions: 54 x 36 x 13 mm, Weight: 26g

FC Firmware: INAV Target: MATEKF76/ArduPilot(ChiBiOS) Target: MATEKF765-WIN

PDB:
Input voltage range: 9~36V (3~6S LiPo) w/TVS protection
2x ESC power pads
Battery Voltage Sensor: 1:10 (Scale 1100 in INAV, BATT_VOLT_MULT 11.0 in ArduP
Current Senor: 132A, 3.3V ADC (Scale 250 in INAV, 40 A/V in ArduPilot)

BEC 5V output:
Designed for Flight controller, Receiver, OSD, Camera, Buzzer, 2812 LED_Strip, Buzz
AirSpeed
Continuous current: 2 Amps, Max.3A

BEC 9V /12V output:
Designed for Video Transmitter, Camera, Gimbal ect.
Continuous current: 2 Amps, Max.3A
12V option with Jumper pad

BEC Vx output:
Designed for Servos
Voltage adjustable, 5V Default, 6V or 7.2V via jumper
Continuous current: 8 Amps, Max.10A

BEC 3.3V output:
Designed for Baro / Compass module and Spektrum RX
Linear Regulator
Continuous current: 200mA

LAYOUT

	INAV Airplane	INAV Multirotor	ArduPilot
S1	Motor	Motor	TIM2
S2	Motor	Motor	
S3	Servo	Motor	TIM5
S4	Servo	Motor	
S5	Servo	Motor	TIM1
S6	Servo	Motor	
S7	Servo	Servo	TIM4
S8	Servo	Servo	
S9	Servo	Servo	
S10	Servo	Servo	
S11	Servo	Motor, No DMA	TIM9
S12	Servo	Motor, No DMA	NO DMA

Vx: BEC 5V/6V/7.2V for servos, Default is 5V
8A cont. Max.10A

DShot is not supported on S11 & S12

RX5: UART5_RX, No TX5 on this FC

Bz- & 5V: General active 5V buzzer
Bz-, 5V & G: Matek Dbuz5V
LED: WS2812 LED signal output

Vsw= 9V Vsw= 5V

5V: onboard BEC 5V 2A cont. Max.3A
9V: onboard BEC 9V 2A cont. Max.3A,
*** 9V rise to 12V if "9V->12V" jumper is bridged.
G: Ground

+ & - : Battery & ESC power pads. 9~36V DC(3~8S LIPO).

Voltage meter scale 1100 (INAV)
Current Sensor: 132A, Scale 250 (INAV)

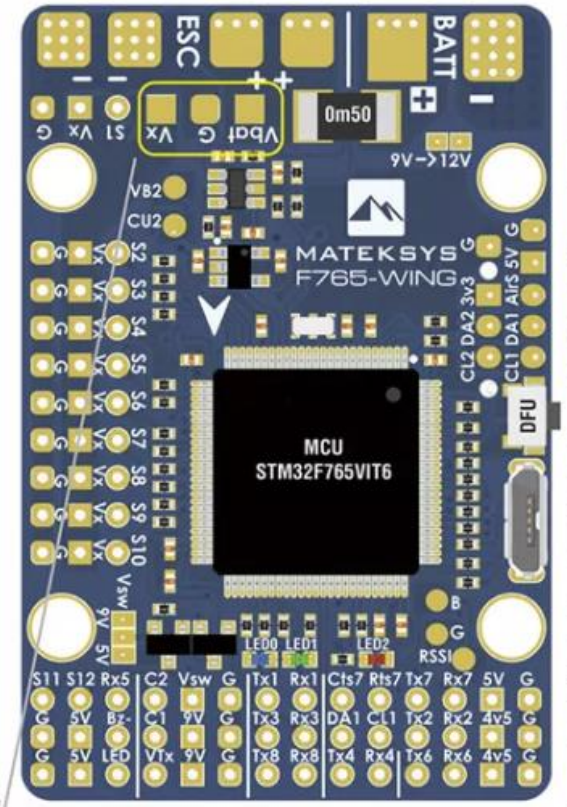

Vsw: 5V/9V selection
*** ON/OFF can be switched via Modes/USER1 (INAV)
*** Max.1A load on this pad. (Default ON)

C1: Camera-1 video IN (Default)
C2: Camera-2 video IN
*** C1/C2 can be switched via Modes/USER2 (INAV)

VTX: Video OUT for Video Transmitter

ArduPilot tips
on board battery voltage: BATT_VOLT_PIN 12, BATT_VOLT_MULT 11
on board current sensor: BATT_CURR_PIN 13, BATT_AMP_PERVLT 40

VB2: Voltage divider 1K:10K, Max.36V supported
BATT2_VOLT_PIN 4, BATT2_VOLT_MULT 11
CU2: for external current sensor, Max.3.3V
BATT2_CURR_PIN 15

*** No definitions for VB2 & CU2 in INAV target

9V rise to 12V

AirS: Analog Airspeed sensor (0~6.6V)
1:1 voltage divider built-in

DA2 & CL2: I2C2
DA1 & CL1: I2C1
3.3: LDO3.3V 200mA

INAV tips
I2C1 compass QMC5883 /MAG3110 /HMC5883 /IST8310/LIS3MDL
OLED 0.96"
I2C2 Barometer BMP280 / MS5611
Digital AirSpeed sensor Pitot_MS4525
Temperature sensor

Button: Boot(DFU) mode button

LED 0: Blue, FC Status
LED 1: Green, FC Status
LED 3.3: Red, 3.3V Status

Rssi: Analog RSSI, RSSI_ANA_PIN 11 (ArduPilot)

4V5: 4.4~4.8V, Max.500mA
*** the voltage is also supplied when connecting via USB

TX1/RX1: UART1
TX3/RX3: UART3
TX8/RX8: UART8
TX4/RX4: UART4

TX7/RX7: UART7
CTs7/RTs7: Uart7_CTS/RTS for ArduPilot Telem1

TX2/RX2: UART2
DA1 & CL1: I2C1, for compass

RX6: UART6-RX for Serial_RX by default
PPM share RX6 pad
TX6: UART6-TX w/o Softserial enabled
TX6: Softserial1_TX w/ CPU based serial ports enabled

INAV tips
****** F765 MCU has inner inversion, SBUS can be connected to any unused UART_RX.***
****** Frsky FPort, SmartPort, TR/SA VTX control can be connected to any unused UART_TX***
****** GPS can be connected to any unused UART_TX & RX***

INAV OUTPUT
S1 - MOTOR1
S2 - MOTOR2
S3 - PITCH/ELEV
S4 - ROLL/AIL1
S5 - ROLL/AIL1
S6 - YAW/RUDD

F765 WING